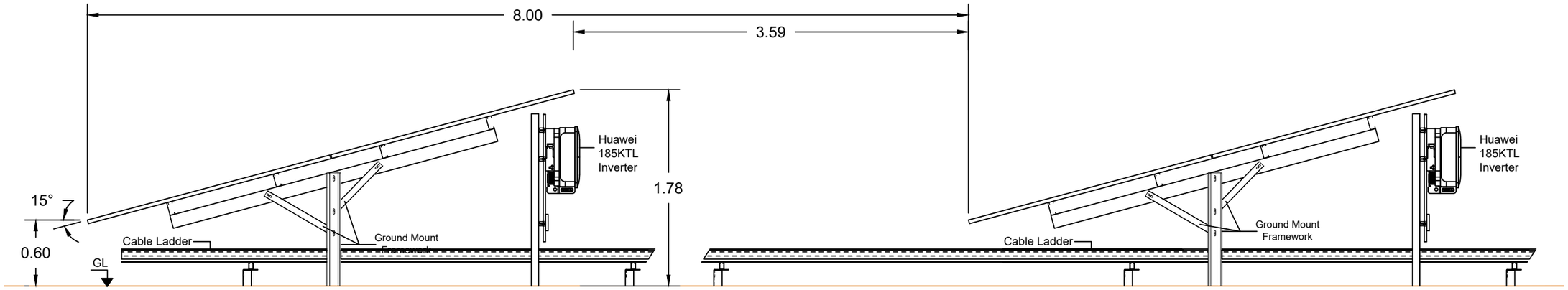

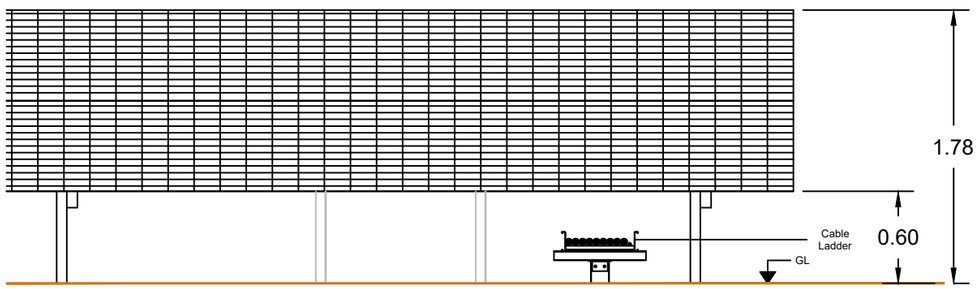

FRONT ELEVATION

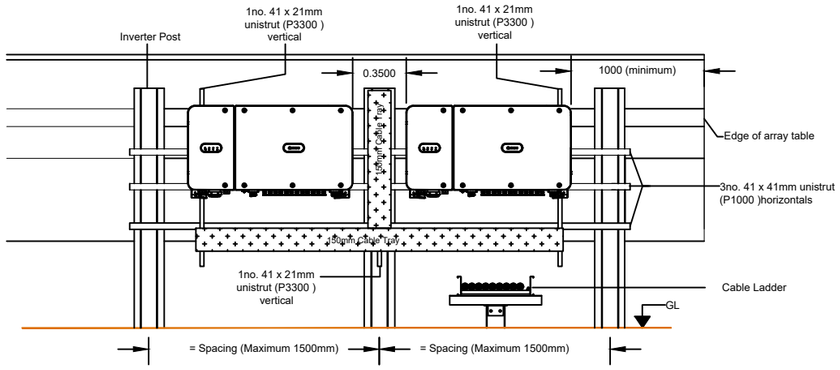

MOUNTING ARRANGEMENT OF 2no. INVERTERS & CABLE TRAY
(Free Standing)

Installer Details

Anesco Ltd.
The Green,
Easter Park,
Benyon Road,
Reading,
RG7 2PQ
Tel: 0845 894 4444

Comments

Revision	Description	Revised By	Approved By	Date
A	Issued for comment	JH		26/08/2021
B	Elevation Height amended	JH		26/10/2021

Scale	Drawn By	Checked By	Signed by PM	Date Checked	Page	Sheet
1:40@A3	JH				1 of 1	A3

Installation Address

West Perimeter Road, Dragon LNG Terminal, Milford Haven, SA73 1DR

Project

DRAGON LNG SOLAR FARM - MEADOW

Title

TYPICAL SECTION THROUGH ARRAY

Drawing No. C0002459_06

Rev. B

Anesco™ AMAZING ENERGY